NEXT SHALE 2017

Organized by: dmg::events

Navigating the Future of Unconventional Resources

A NOVEL FRAC-OPTIMIZED PERFORATING SYSTEM FOR UNCONVENTIONAL WELLS: DEVELOPMENT AND FIELD-TRIAL

Parry Hillis, Baker Hughes

AGENDA

- Background
- Objectives
- System Development
- Field-Trial and Analysis
- Conclusions

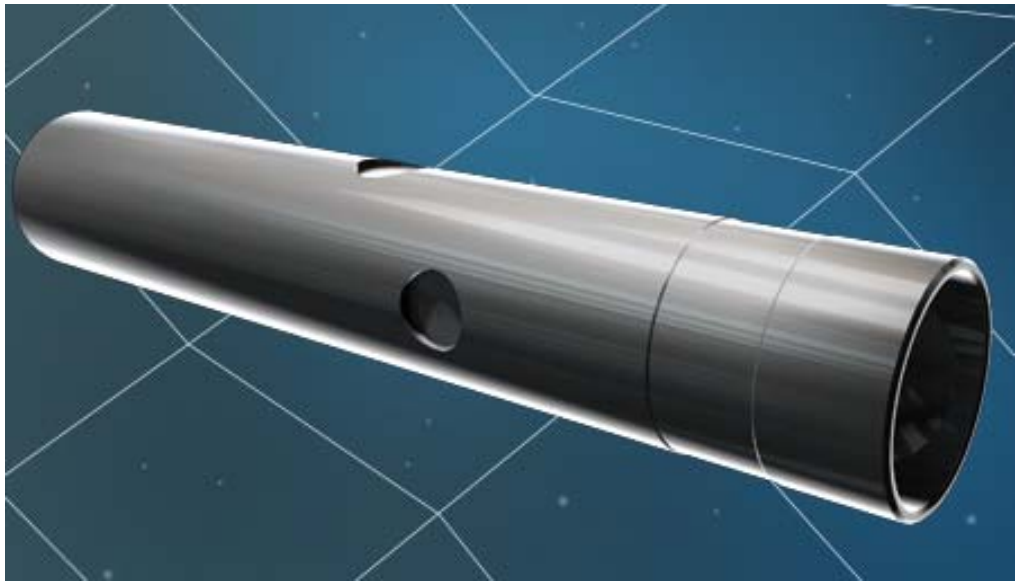

BACKGROUND

- In Plug & Perf completions, perforations are intended to open the path to initiate a hydraulic fracture.
- Standard **CONVENTIONAL** perforating guns are currently used in these applications.
- Shot patterns such as 60 deg and 6 SPF.
- Entry hole average diameters of ~ 0.3 - 0.4”.
- Standard length of guns ~ 2.5 - 7 ft.

For a long time, we considered the standard gun systems used in **Vertical** Conventional Reservoirs and applied them for **Horizontal** Unconventional Reservoirs…..

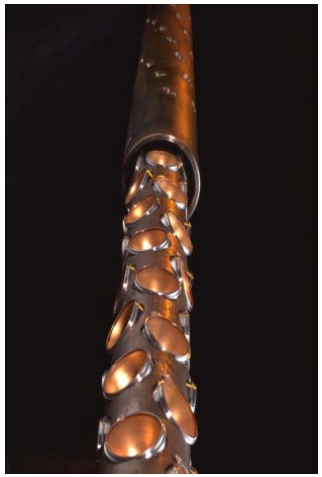

BACKGROUND - Hydraulic Fracture Growth

- Properties Affecting the Fracture Orientation and Growth:
  - Rock Properties
  - Bedding Planes
  - Artificial Barriers
  - Pore Pressure
  - Net Pressure

Perforations have a strong impact on these factors

- Perforations are Near-Wellbore Friction Sources:
  i. Perforation Friction, influenced by: Diameter, Number and Discharge coefficient
  ii. Fracture Tortuosity
  iii. Multiple Fractures.

Current systems address (i) by optimizing the number of shots and diameter.

Systems to assist in reducing tortuosity, and eliminating near wellbore multiple fracture width restrictions are rather limited….

BACKGROUND: Near Wellbore Fracture Containment

Fracture Tortuosity:

Tortuosity in the fracture path acts as a choke that can limit the growth of fractures, while increasing the surface treating pressure, limiting the concentration of proppant that may be placed, while increasing the risk of screenout.

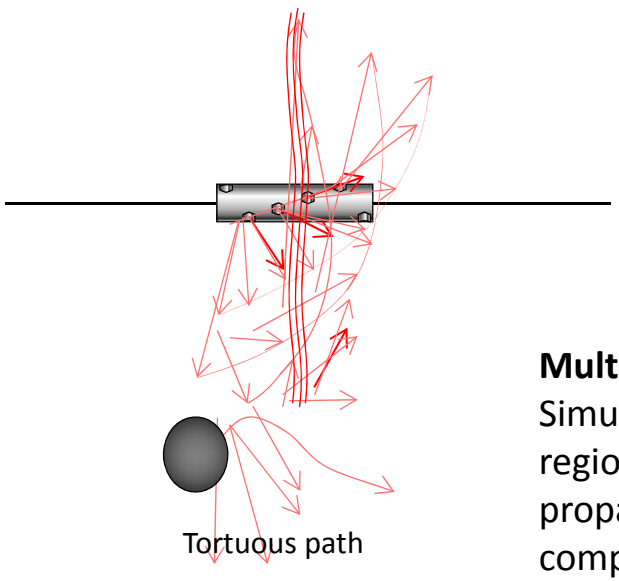

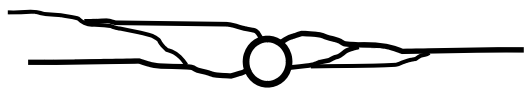

Multiple Fractures:

Simultaneous creation of multiple hydraulic fractures within the near wellbore region, that are generated from a single perf cluster, can inhibit the desired propagation of a single main fracture plane. Multiple hydraulic fractures compete for fracture width and are associated with higher treating pressures, and can cause the diversion of fluid and proppant disproportionately to other perf clusters.

OBJECTIVES

Develop a frac-optimized system that optimizes fracture treatment and improves reservoir access in unconventional wells.

Key drivers:

- Fewer perforations
- Axial consolidation of flow area and orienting the flow entry to the high side of the lateral.
- Compact and Efficient design
- Improved Reliability
- HSE Impact

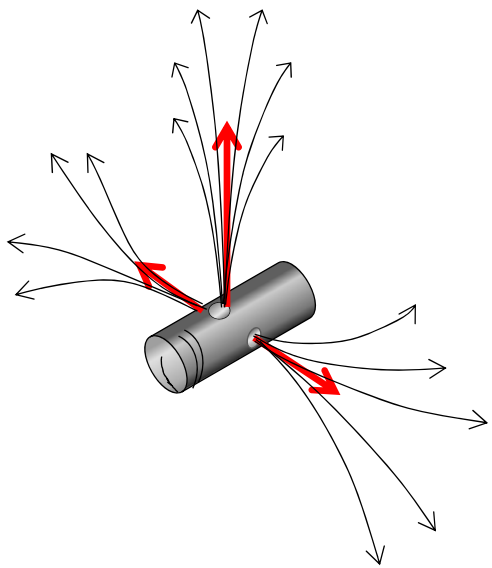

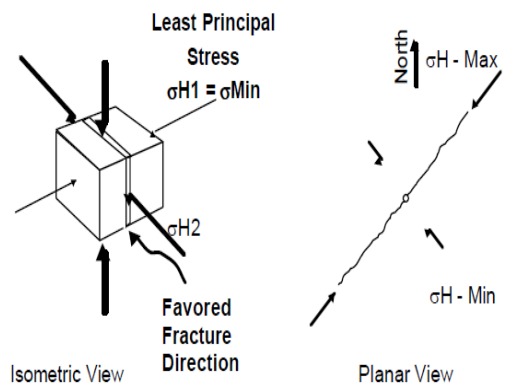

SYSTEM DEVELOPMENT

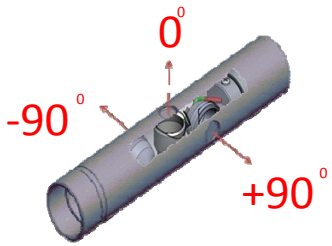

Phase	Hole Size Average	Current System Hole size	Penetration	Current System Penetration
-90°	0.3” - 1”	**0.91”**	4”-23”	**5.0”**
0°	0.3” - 1”	**0.33”**	4”-23”	**23.0”**
+90°	0.3” - 1”	**0.91”**	4”-23”	**5.0”**

- Gun length 18 in.
- Spacing between charges 1.4 in.
- Three shaped charges
- Two big hole charges on the sides, Deep Penetrator on the high-side
- 3-3/8” Gun System

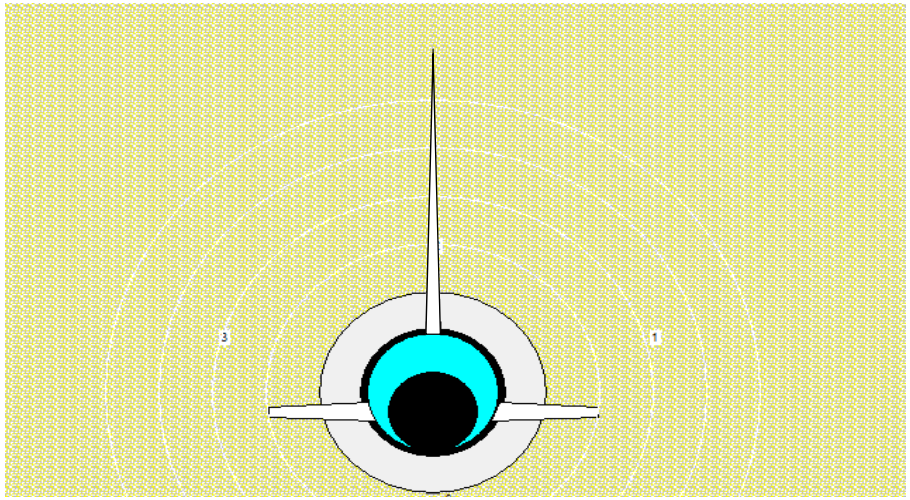

SYSTEM DEVELOPMENT

Charge	Stand-off	Water Gap	Casing Type	Casing Thickness
4628 FP F195331004	0.570”	0.804”	5-1/2” 20# P110	0.36”
3324 XS A1001070404	0.360”	1.608”	5-1/2” 20# P110	0.36”

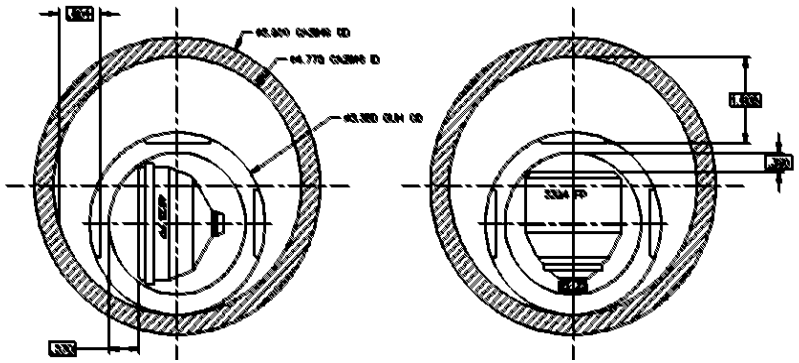

Shot #	Charge Type	Explosive Type	Internal Standoff (in)	Water Gap (in)	Casing Yield Strength (psi)	Casing Thickness (in)
1A	4628 FP	HMX	0.570	0.804	110,000	0.36
1B	4628 FP	HMX	0.570	0.804		
2A	3324 XS	HMX	0.360	1.608		
2B	3324 XS	HMX	0.360	1.608		

The following EHD & TTP data were measured from the casing plate & concrete targets.

Shot #	TTP (in)	EHD long (in)	EHD short (in)	EHD average (in)
1A	5.0	0.92	0.90	0.91
1B	5.25	0.93	0.90	
2A	23.0	0.34	0.31	0.33
2B	21.0	0.33	0.33	

Gun Swell Testing

	Body Swell (in)	Dia Swell %
Gun 1	3.470	2.777%
	3.460	2.481%
	3.460	2.481%
Gun 2	3.450	2.184%
	3.470	2.777%
	3.470	2.777%
Ave	3.463	2.579%
Max	3.470	2.777%
Min	3.450	2.184%

	Before (in)
OD	3.380
	3.380
	3.380
	3.370
	3.370
	3.380
	3.380
	3.370
Ave	3.376

SYSTEM DEVELOPMENT: Operational Efficiency

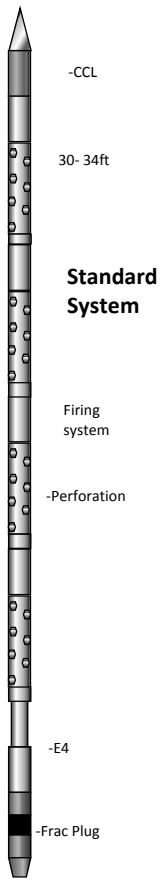

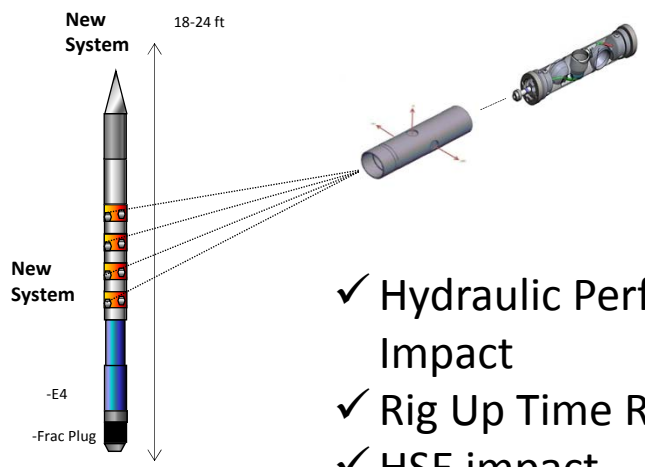

- ✓ Hydraulic Performance Impact
- ✓ Rig Up Time Reduction
- ✓ HSE impact
- ✓ Reliability Impact

FIELD TRIAL AND ANALYSIS

- Field-trial was recently conducted with the 3-3/8” Frac-Optimized Gun system.
- Multi-stage Horizontal Completion (55 stage well) in Utica Shale, Ohio.
- Frac-optimized system was deployed on two stages and compared with conventional gun stages.
- 5 guns/clusters per stage.
- “Plug and Perf” subsequently followed by a pumping job.

FIELD TRIAL AND ANALYSIS

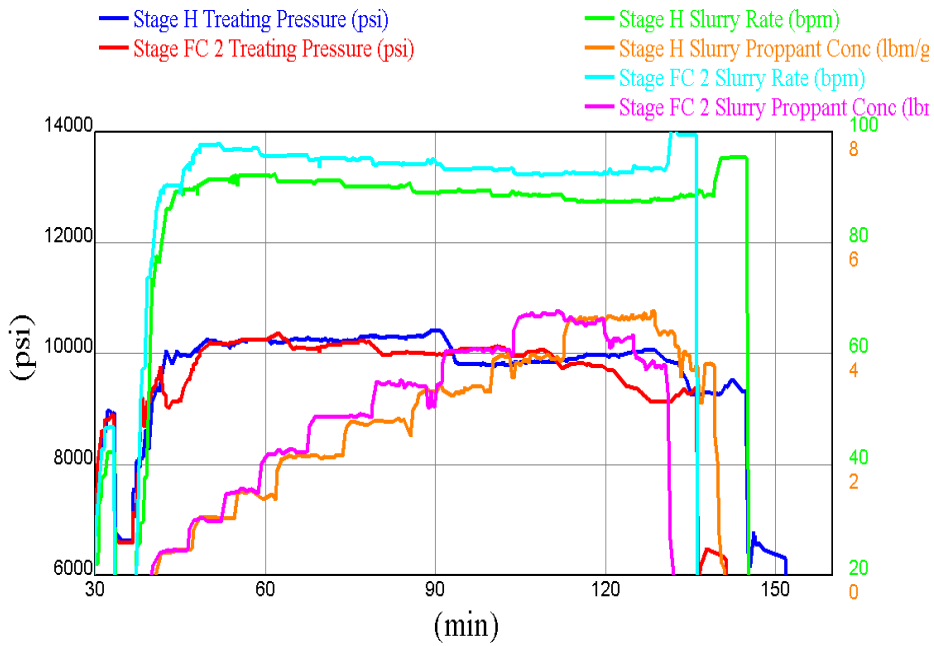

- Desired pumping rate was 95BPM.
- Improved Operational efficiency
- Detailed Analysis: Breakdown stage, Pad stage, Proppant stage, Flush stage

FIELD TRIAL AND ANALYSIS

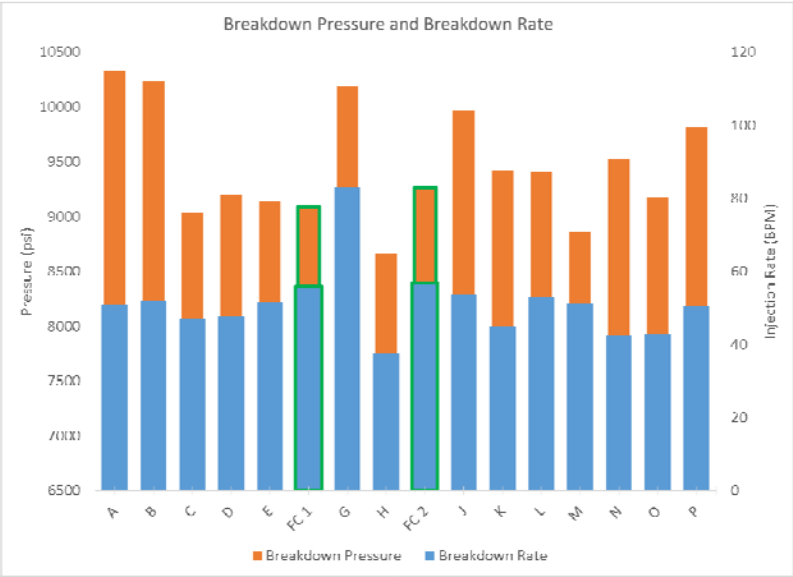

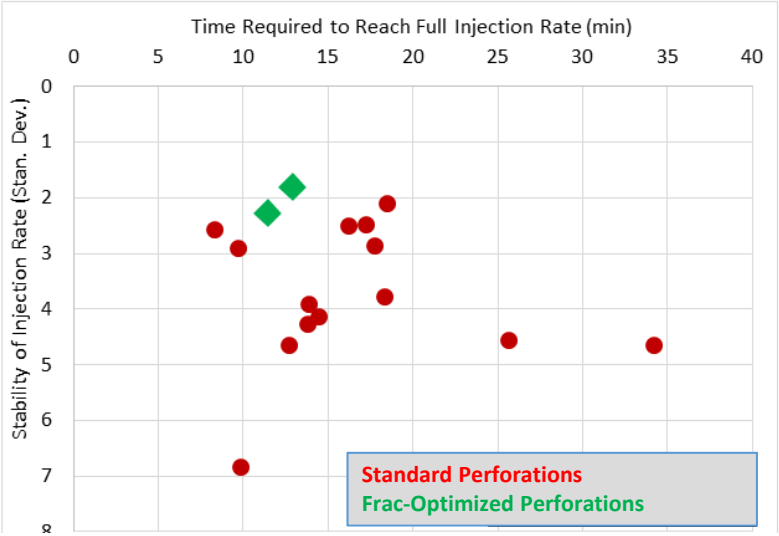

- Lower average surface treatment pressures
- Higher average rates than neighboring stages
- 35% decrease in time required to reach full, as designed, injection rate.
- 82% decrease in standard deviation of injection rate during proppant stages.

FIELD TRIAL AND ANALYSIS

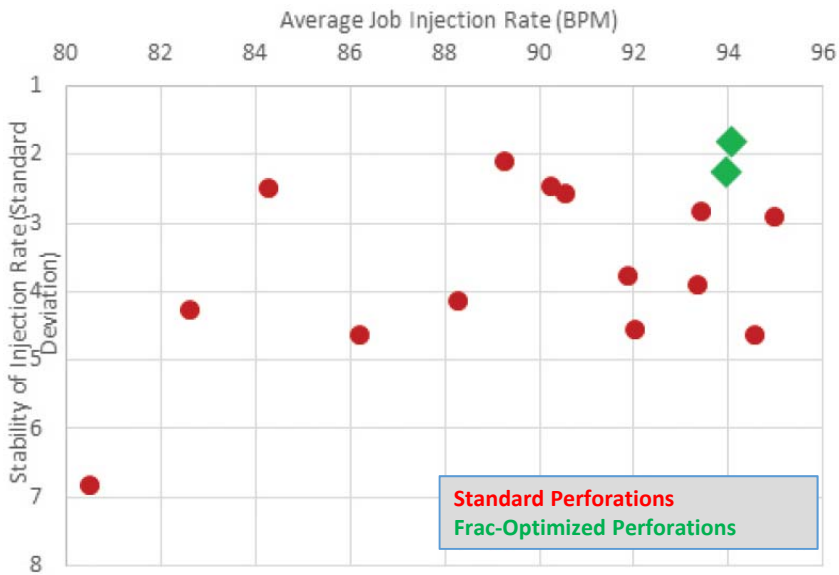

- Compares pumping performance during only the proppant stages.
- Frac-optimized stages had some of the highest average injection rates during the proppant stages and proppant mass rate.

FIELD TRIAL AND ANALYSIS

			Avg. FOS	Avg. CON	% DIFF
Breakdown	STP	(psi)	9180	9498	-3.5%
	Slurry rate	(BPM)	56.5	50.6	10.3%
Pad	STP max	(psi)	9482	9832	-3.7%
Pad & Initial Proppant Stage	Time to Full Rate	(min)	12.2	16.4	-35.1%
Proppant Stages	Total avg. mass rate	(lb/min)	5386	5135	4.7%
	Avg. slurry rate	(BPM)	94.0	90.0	4.3%
	STD dev slurry rate	(BPM)	2.04	3.72	-82.3%

- During breakdown stage, FOS exhibited a 300 psi reduction in breakdown pressure even at a 10% increase of injection rate.
- 35% decrease in time required to reach full, as designed, injection rate.
- Increase in proppant mass rate of 250 lb/min.
- 4 BPM increase in average slurry rate during proppant stages
- 82% decrease in standard deviation of injection rate during proppant stages, indicating an increase in rate stability.

FIELD TRIAL AND ANALYSIS

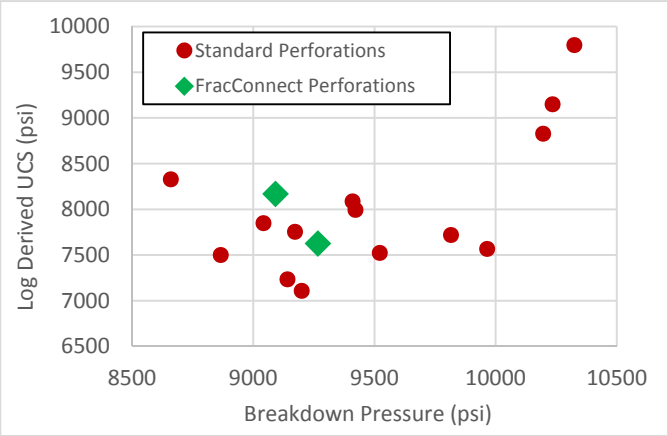

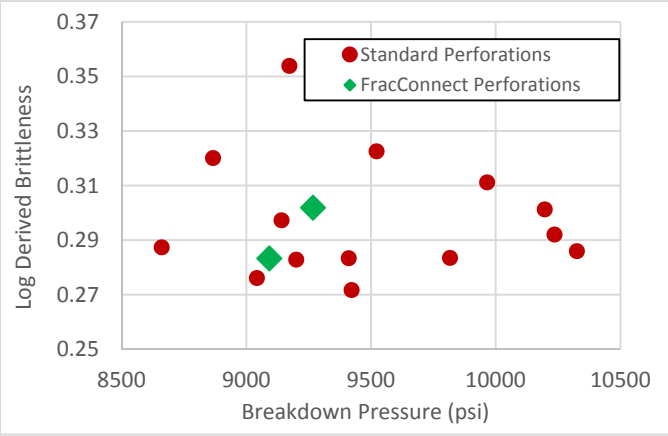

These observations do not appear correlated to any log derived rock mechanics parameter, that is to say these observations do not appear to be lithology dependent.

FIELD TRIAL AND ANALYSIS

Frac-Optimized Stages compared to standard perforation geometry

- During Pad Stage
  - Reached maximum injection rate quicker (on average)
  - Exhibited below average Breakdown pressures at above average rates
- During proppant stages:
  - exhibited lower average surface treatment pressures than neighboring stages
  - higher average rates than neighboring stages
  - Maintained more stable rates
  - Maintained the most aggressive proppant mass rate

These observations do not appear correlated to any log derived rock mechanics parameter, that is to say these observations do not appear to be lithology dependent.

CONCLUSIONS

The **Frac-optimized perforating system** features an efficient gun design and an optimized perforation pattern that enhances fracture treatments, improves overall drainage and increases operational efficiency.

Benefits

- Creates more focused fracture initiation points
- Minimizes fracture tortuosity effect
- Mitigates friction caused by competing fractures near the wellbore
- Reduces pressure drops in the near wellbore area

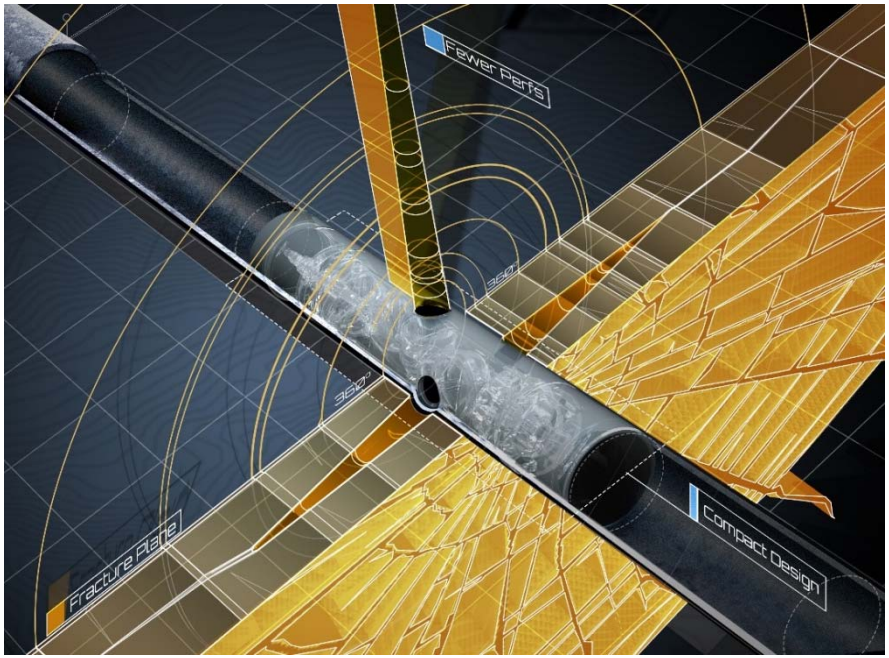

Features

- Fewer, axially consolidated perforations
- Optimized perforation geometry
- Improves proppant dispersion and placement
- Compact & Efficient design

Acknowledgements / Thank You / Questions

The authors are grateful to Baker Hughes for the permission to present this work